**Advanced materials** testing, manufacturing, engineering and design

# intec update

Winter 2007

Integrated Technologies, Inc.

1910 Merrill Creek Parkway
Everett WA 98203
Phone: 425-293-0340
www.in-tec.com

## Inside:

Intec develops flexible biaxial loading system
- page 2

FAA-certified ULD aircraft shipping containers ideal for specialized and high-value cargo
- page 3

Reliable adhesive stress-strain measurements in hostile environments
- page 4

Intec works with industry leaders to define NADCAP standards
- page 5

Effects of UV exposure in composite materials
- page 6

Employee profile: Bryan Mines
- page 6

SAMPE meets in Baltimore
-page 7

Tell us how we can meet your needs at www.in-tec.com/survey/survey.htm

## President's message

For nearly twenty years, Intec has provided advanced composites testing, manufacture and design to aerospace, satellite, electronics and transportation manufacturers around the world. We sincerely thank you for your business and hope that you will continue to let us know how we can meet your advanced materials and structural needs. We welcome your phone calls, or you can visit our online survey at www.in-tec.com/survey/survey.htm.

In 2006 Intec continued to grow in several areas. Along with gaining FAA manufacturing approval (TSO) for our composite Transport Aircraft LD3 containers, we have expanded our testing capabilities with additional chambers for conditioning environments to include moisture, salt, solvent, UV and temperature exposure.

There have also been many improvements in our test lab, including the addition of a variety of standard ASTM fixtures and our expanded involvement in large-notch and full-scale testing.

For composite fabrication, we upgraded our autoclaves with state-of-the-art control systems. We also added a second, larger freezer -- thus quadrupling our on-site cold storage -- and a second, large (7' x 12') gantry mill for large specimen, component and fixture machining.

In anticipation of supporting our projected level of business in 2007 we have continued to add project engineers and support personnel to our engineering staff. We look forward to continuing and expanding our relationships with our valued customers in the coming year.

Maryann Einarson, Ph.D., President

If your project involves advanced composite testing, engineering, design, or manufacturing, please read this newsletter to see how we have increased our capabilities over the past year. We are ready with solutions for all your advanced composite materials needs.

# Intec develops flexible biaxial loading system

## Newlyenhancedtransverseloaddevicecombinedwithexistingaxialloadsystemandframes is used to expose composite laminates and structures to biaxial loads.

Due to the anisotropic and heterogeneous nature of most composites, the response of composite structures exposed to loads in more than one direction is considerably more difficult to predict than in metal structures. Bonded and bolted joints in composites under this same loading are even more difficult to understand and analyze. Industry-wide efforts to develop and improve analytical models and techniques to predict this complicated behavior require calibration and comparison to actual test data to establish their validity.

Based on this need for test data, Intec developed a flexible frame-based biaxial test system for exposing laminates and structures to in-plane biaxial tension and compression loading.

Intec has designed and built a configurable and dynamic variable-control biaxial tension and compression test fixture for evaluating the strength of composite laminates within an in-plane biaxial tension-compression stress state.

Biaxial tension is produced by loading a specimen simultaneously in two directions. Because of the flexibility of independently controlling actuators, this system can provide any combination of axial and transverse load (static or fatigue) tension or compression up to the capacity of the actuators.

Transverse loads are applied through a self-reacted actuator and fixture system, neutrally suspended at the target area of the specimen or component. This allows the arrangement to "float" vertically, adjusting to any vertical displacements of the component. This transverse load system can support a wide variety of specimens/elements and can be used with different test frames as well as our strong backs and load floors for larger components and/or higher loads.

Please call us to discuss how biaxial testing might relate to your validation needs.

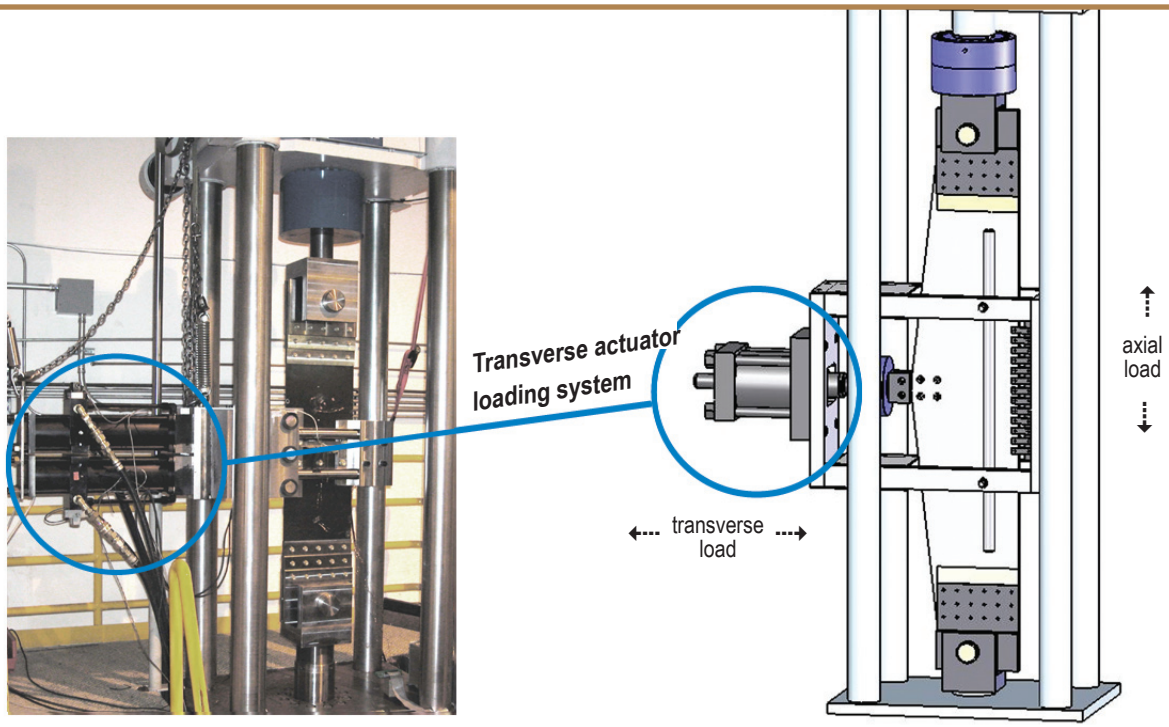


*In the configuration shown above, a 60 kip transverse load system is used in conjunction with Intec's 600 kip load frame to test components in excess of 15 feet long and several feet wide. The transverse load actuator is circled in both the photograph and the drawing.*

# FAA-certifiedULDcontainersidealforspecialapplications

Intec has received FAA authorization under TSO-C90c for the manufacture of composite ProWall™ Unit Load Device (ULD) aircraft shipping containers.

The Model CS-09 ProWall™ ULD is the first in a new line of specialty containers produced under the 2K2C classification, and is designed to meet the IATA requirements for LD3/AKE containers.

**The ProWall™ ULD-LD3 fits 787's, 777's, 747's, MD11's, L1011's and all Airbus wide bodies.**

This highly adaptable ULD is a building block for customised special applications and may be internally configured to fit a variety of specialized missions. The ProWall™ ULD is easily configured to house and protect its contents from physical and environmental damage. Because of the ProWall™ ULDs' unique design features, these containers are ideal for the transportation, housing and protection of specialized high value cargo and equipment.

ProWall™ containers are well suited for integration into a variety of our customers' mobile systems. Critical to mobile systems performance are ProWall™ containers' dual features of internal configurability and damage protection of both mechanical and environmental loading.

*Selected features and options include:*

- *Damage-tolerant, watertight monolithic design*
- *ProWall™ locking (secure) door systems*
- *Internal equipment shelving and racks*
- *Internal shielding*
- *Built-in lift points and tie downs*
- *Heating and venting*
- *External power coupling*

*Intec's ULD-LD3s are made of ProWall ™ composite material, resulting in containers that are lighter and tougher, and require far less maintenance than traditional, aluminum ULDs.*

# Intec develops reliable adhesive stress-strain measurements in hostile environments

Bonded joints are a common feature of advanced composite and metal structural designs. While highly efficient, a bonded joint's structural capability can be affected by many diverse variables including surface preparation, bondline thickness, environment (temperature, humidity and solvents) and load history.

Industry and academia have and continue to develop analytical tools to predict joint strength and life as a function of these many variables. The adhesive stress-strain curve is of primary importance when accurately modeling bonded joints. Three typical adhesive strain cures for three different adhesives are shown below. All exhibit an initial linear portion followed by a non linear portion to failure. Adhesive A is the stiffest and strongest while C is the toughest (highest strain to failure). These curves can shift significantly through changes in bondline thickness, environment, and load history (in the nonlinear region).

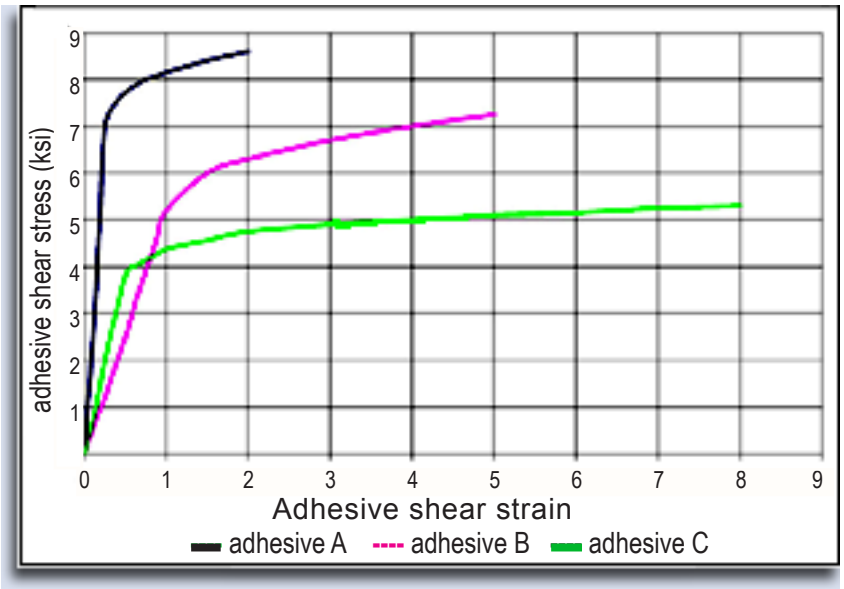


*Adhesive A is the stiffest and strongest, while C is the toughest (highest strain to failure).*

The KGR-1 extensometer was developed to measure the in-situ stress-strain behavior of an adhesive through failure. Use of the KGR-1 is described in ASTM D-5656. The specification requires a thick substrate to minimize rotation of the gage section, resulting in a predominantly shear state of stress in the adhesive (low peel component). This specimen configuration and the use of the KGR-1 has been studied by many researchers (Krieger, Adams, Kassapoglou and Adelman, Tasi and others). While experts determined this method is useful, they also concluded that

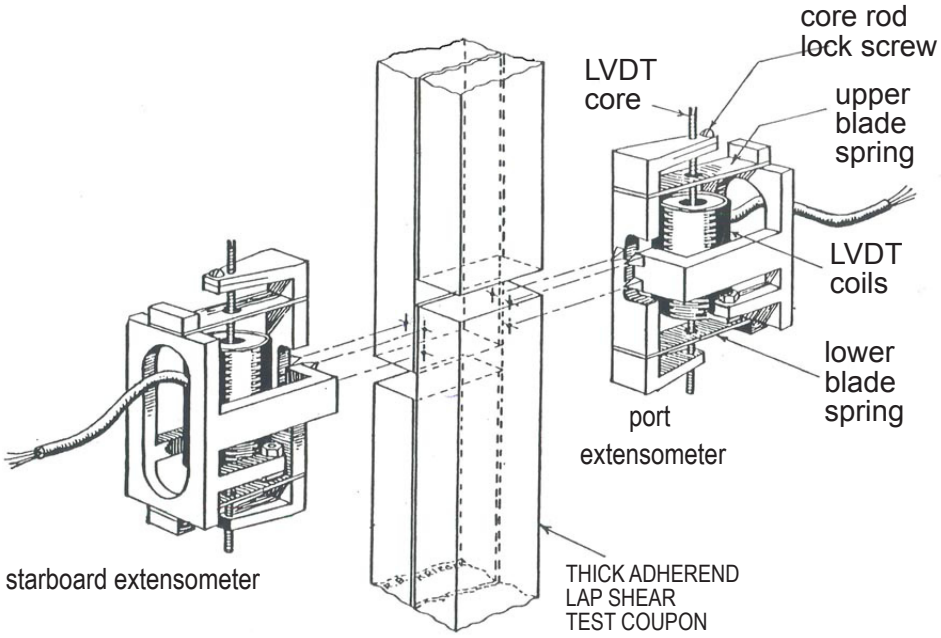


Schematic drawing of KGR-1 extensometer

(continued on page 5)

*(KGR-1 Testing - continued)*

significant error can be introduced through substrate corrections as well as instrument positioning, slippage and rotation. This is due to the small displacement the instrument is required to measure (on the order of 0.0000025 inches). Additional difficulty can arise when testing in elevated or cold environments due to transient thermal changes and/or restrictions in the linear movement of the instrument due to ice crystals.

Intec has developed and refined techniques associated with KGR-1 testing for more than a decade. Good test data starts with good specimen manufacturing, consistent bondlines and precise preparation. Intec has produced thousands of thick adhered specimens over the years using various primers and adhesives ranging from brittle to tough, low to high temperature and having a wide variety of tightly controlled bondline thicknesses. We have built custom data analysis algorithms and computational tools to standardize the cumbersome methods offered in the ASTM standard. We have refined the mechanics of the KGR-1 extensometer so that its interface with the specimen, while no different in geometry, is significantly more secure and reliable. We have refined the electronics and test methodology to allow our KGR-1 extensometer an expanded practical temperature capability of -200°F to 300°F.

Ultimately, the data produced by this test method is only as good as the dimensional measurements taken of the bonded joint itself – which we obtain through rigorous application of the latest in digital microscopy measurement techniques. Intec clients can be assured that our equipment, specimen fabrication and preparation, and test methods exceed the requirements of ASTM D5656, and that our thick lap-shear tests yield data of the highest quality.

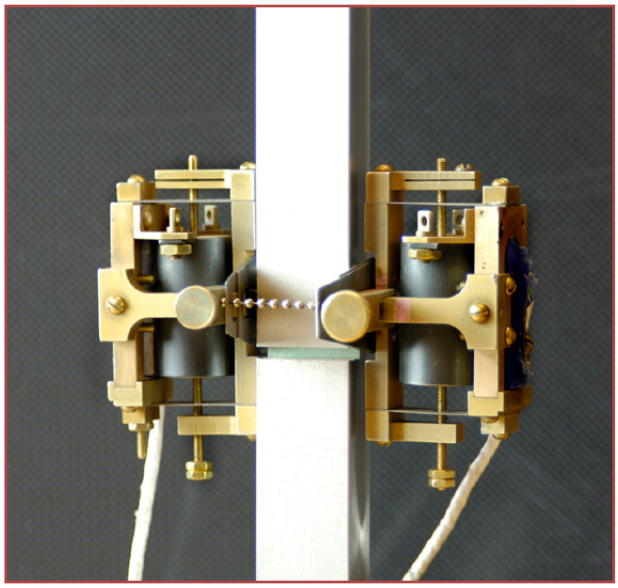

KGR-1 extensometer

## Intec works with industry leaders to define NADCAP standards for composite testing

Since 2003, Intec's materials test lab has been approved by NADCAP, a worldwide industry-managed program for special processes in the aerospace industry. NADCAP program requirements come from PRI's AC7101 specification and are based on the ISO 17025 standard, which expands upon the basic requirements of the ISO 9001 quality standard and gives technical requirements for calibration and testing laboratories. Intec is currently working closely within NADCAP to develop test type based standards for mechanical and physical properties of composites based on our nearly 20 years of testing experience.

Intec's Quality System has also been approved by the FAA and numerous other major aerospace companies, including Boeing, Skikorsky, Kaman Aerospace, Bell Helicopter and Lockheed-Martin.

Every employee at Intec participates in defining, developing and enhancing our processes and Quality System procedures. Our rigorous adherence to quality standards and commitment to exceeding the expectations of our customers guarantees your satisfaction.

FEDERAL AVIATION ADMINISTRATION

Nadcap
pri PERFORMANCE REVIEW INSTITUTE®
- Accredited -

# Intec's weatherometer measures the effects of UV exposure on composite materials and structures

To help customers understand how their composite materials perform in real-world environments over time, Intec has acquired a state-of-the-art weatherometer, the "UVCON", a fluorescent UV accelerated weathering tester.

Age and environmental factors such as heat, humidity, ultraviolet radiation and oxidation can cause degradation in composite plastics, adhesives and paint coatings. Deterioration can range from color changes and fading, to cracks, chalking, delamination, and loss of structural weight and integrity.

**Our accelerated weather tester will help you understand how your composite materials will perform in real-world environments over time.**

Using state-of-the-art digital and optical technologies, the weatherometer aids Intec engineers in studying how a specific composite material performs over time under standard weather cycles.

Long-term environmental aging of composites has been a concern since NASA initiated the E-cubed program in the 1970s. With Intec's addition of the UVCON weatherometer to our testing laboratories, we have increased our capabilities to help customers get optimum performance from their composite materials and structures.

*personal profile*

## Bryan Mines

Bryan Mines, Project Manager at Intec, was born and raised in Idaho Falls, Idaho, a small city on the plains of the Snake River. Bryan made a northwesterly migration at age 18 when he traveled to Pullman, Washington, and entered Washington State University. Four years later, after earning a Bachelors of Mechanical Engineering, Bryan moved in the same northwesterly direction until he landed in the Seattle area, where he joined Intec as a lab technician.

Since then, Bryan's latitude and longitude have remained constant. He excelled at his first job at Intec, and was soon given the opportunity to run programs. Bryan has worked in the test lab, in project management and as an assistant quality manager. In 2002, he earned a promotion to full-time Project Manager.

When he's not working, Bryan gets outdoors as often as possible, hiking the trails of Western Washington. Among his interests, Bryan likes books, music concerts, video games, and spending time with friends and families.

Bryan is planning another big move in May 2007, although it doesn't involve points on the compass. Bryan will again change states - but this time, the self-professed perpetual bachelor is moving to the state of matrimony. Here's to a great wedding, Bryan, and to continued success at Intec!

## Contact us

Intec (Integrated Technologies, Inc.)

1910 Merrill Creek Parkway

Everett WA 98203

Phone: 425-293-0340

Fax: 425-293-0341

www.in-tec.com

Maryann Einarson, President, CEO
meinarson@in-tec.com

Brian Coxon, Director of Engineering
bcoxon@in-tec.com

Robert LaMantea, Director of Sales and Marketing
rlamantea@in-tec.com

Rod Wishart, Operations Manager
rwishart@in-tec.com

## See you at SAMPE!

### *In Seattle:*

See you at the Puget Sound Materials Expo (PSME) on February 27th at the Museum of Flight in Seattle. Visit the Seattle Chapter Website at http://www.seattlesampe.org.

### *In Baltimore:*

This year the SAMPE 2007 Conference and Exhibition are moving east, to Baltimore, Maryland. We look forward to seeing you at the Baltimore Convention Center, June 3 through 7, 2007. Please come visit us at booth #1015. For more information, visit the website for SAMPE (Society for the Advancement of Material and Process Engineering) at http://www.sampe.org/events/2007Baltimore.aspx. See you there!